NUCLEI

Atomic mass unit (u)

An atomic mass unit is defined as 1/12th the mass of a carbon (^{12}C) atom. According to this-

$$1u = \frac{\text{mass of one } ^{12}C \text{ atom}}{12}$$

$$= \frac{1.992647 \times 10^{-26} \text{ kg}}{12}$$

$$= 1.660539 \times 10^{-27} \text{ kg}$$

Isotopes and Average Atomic mass

Isotopes

Atoms with same atomic number (exhibit the same chemical properties) but different mass number are known as isotopes of each other. For e.g., Chlorine ($_{34.98}Cl$ and $_{36.98}Cl$), Hydrogen.

Average Atomic mass

Different isotopes of the same element have different relative abundances. Therefore, the atomic mass of such an element is given by its average atomic mass which is calculated as follows-

For e.g., consider an element A with two isotopes A_1 and A_2 with relative abundance of A_1 being b%. The average atomic mass of A is given by-

Percentage of A_2 = 100-b

$$M_{avg} = \frac{A_1 b + A_2(100 - b)}{100}$$

Note: Hydrogen has three isotopes- Protium, Deuterium and Tritium. Tritium nuclei is radioactive and is unstable therefore, it is not found naturally.

Composition of the nucleus

The nucleus consists of two entities namely, protons and neutrons (collectively known as nucleons). The positive charge inside the nucleus comes from the protons.

Neutrons are neutral particles. Free neutrons, unlike protons are unstable. It decays into a proton, an electron, and a antineutrino.

The composition of the nucleus can be described using the following symbols and terms-

Z-atomic number = number of protons

N-neutron number = number if neutrons

A-mass number = Z + N = total number of protons and neutrons.

Note: 1. Notation for nuclear species or nuclides-

Where X is the chemical symbol of the species.

2. Isotopes have the same number of protons but different number of neutrons

3. All nuclides with same mass number are called isobars

4. Nuclides with same neutron number N but different atomic number Z are called isotones

Apni Kaksha

Mass-Energy Equivalence

According to Einstein's Special Theory of Relativity, mass is another form of energy and one can convert mass-energy into other forms of energy and vice-versa.
Mass-energy equivalence relation-

$$E = mc^2$$

Size of the Nucleus (PYQ 2015, 2013)

The radius of a nucleus of mass number A-

$$R = R_0 A^{1/3}$$

Where $R_o = 1.2 \times 10^{-15}$ m
This means that the volume of the nucleus is proportional to A and thus the density of the nucleus is independent of A. Different nuclei are like drops of liquid of constant density

Nuclear Binding Energy (PYQ 2010)

We know that the nucleus is made up of neutrons and protons. Therefore, it is logical to conclude that the mass of the nucleus is equal to the total mass of the its individual protons and neutrons. However, the nuclear mass M is always found to be less than this.
The difference in mass of a nucleus and its constituents, ΔM, is called mass defect and is given by-

$$\Delta M = [Zm_p + (A - Z)m_n] - M$$

Meaning of Mass Defect
Since the mass of the nucleus is less than the sum of masses of its constituents, the equivalent energy of the nucleus is less than the sum of equivalent energies of its constituents. Therefore, if one wants to break a nucleus into protons and neutrons, the extra energy ΔMc^2 has to be supplied. This energy required E_b is related to mass defect-

$$E_b = \Delta M c^2$$

If a certain number of neutrons and protons are brought together to form a nucleus of a certain charge and mass, an energy E_b will be released in the process. The energy E_b is called the binding energy of the nucleus. If we separate a nucleus into its nucleons, we would have to supply a total energy equal to E_b, to those particles.

Binding Energy per Nucleon (PYQ 2016)

The average energy per nucleon needed to separate a nucleus into its individual nucleons.
The following is a plot for the binding energy per nucleon (E_{bn})-

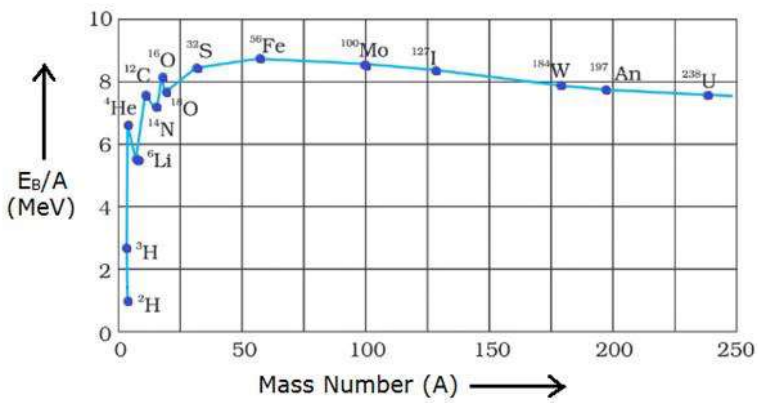

We can make the following observations-

1. the binding energy per nucleon, E_{bn}, is practically constant, i.e., practically independent of the atomic number for nuclei of middle mass number (30 < A < 170).
2. E_{bn} is lower for both light nuclei (A<30) and heavy nuclei (A>170).

Apni Kaksha

We can draw the following conclusions from the plot-

1. The force is attractive and sufficiently strong to produce a binding energy of a few MeV per nucleon.
2. The constancy of the binding energy in the range 30 < A < 170 is a consequence of the fact that the nuclear force is short-ranged. Consider a particular nucleon inside a sufficiently large nucleus. It will be under the influence of only some of its neighbors, which come within the range of the nuclear force. If any other nucleon is at a distance more than the range of the nuclear force from the particular nucleon it will have no influence on the binding energy of the nucleon under consideration. If a nucleon can have a maximum of p neighbors within the range of nuclear force, its binding energy would be proportional to p. Let the binding energy of the nucleus be pk, where k is a constant having the dimensions of energy. If we increase A by adding nucleons, they will not change the binding energy of a nucleon inside. Since most of the nucleons in a large nucleus reside inside it and not on the surface, the change in binding energy per nucleon would be small. The binding energy per nucleon is a constant and is approximately equal to pk. This is called saturation property of nuclear force.
3. A very heavy nucleus, say A = 240, has lower binding energy per nucleon compared to that of a nucleus with A = 120. Thus, if a nucleus A = 240 breaks into two A = 120 nuclei, nucleons get more tightly bound. This implies energy would be released in the process. This is called nuclear fission.
4. Consider two very light nuclei (A ≤ 10) joining to form a heavier nucleus. The binding energy per nucleon of the fused heavier nuclei is more than the binding energy per nucleon of the lighter nuclei. This means that the final system is more tightly bound than the initial system. Therefore, energy would be released in such a process of fusion.

Important PYQs

Ques: A nucleus with mass number A = 240 and B.E./A = 7.6 MeV and breaks into two fragments of each A = 120 with B.E./A = 8.5 MeV. Calculate the released energy **(PYQ 2016) [2M]**

Ans: Initial binding energy = $240 \times 7 \cdot 6 = 1824 MeV$

Final Binding energy = $120 \times 8.5 \times 2 = 2040 MeV$

Released energy =

$B \cdot E_f - B \cdot E_i$

$2040 - 1824$

$= 216 MeV$

Nuclear Force (PYQ 2018, 2011)

1. The nuclear force is much stronger than the Coulomb force acting between charges or the gravitational forces between masses.
2. The nuclear force between two nucleons falls rapidly to zero as their distance is more than a few femtometers. This leads to saturation of forces in a medium or a large-sized nucleus, which is the reason for the constancy of the binding energy per nucleon.
3. The nuclear force between neutron-neutron, proton-neutron and proton-proton is approximately the same. The nuclear force does not depend on the electric charge.

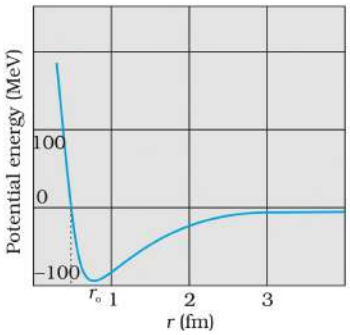

Radioactivity (PYQ 2020)

Radioactivity is a nuclear phenomenon in which an unstable nucleus undergoes a decay. This is referred to as radioactive decay. Three types of radioactive decay occur in nature:

1. α-decay in which a helium nucleus $^{4}_{2}He$ is emitted
2. β-decay in which electrons or positrons (particles with the same mass as electrons, but with a charge exactly opposite to that of electron) are emitted
3. γ-decay in which high energy (hundreds of keV or more) photons are emitted.

Apni Kaksha

Law of Radioactive Decay (PYQ 2014)

In any radioactive sample, which undergoes α, β or γ-decay, it is found that the number of nuclei undergoing the decay per unit time is proportional to the total number of nuclei in the sample. If N is the number of nuclei in the sample and ΔN undergo decay in time Δt then-

$$\frac{\Delta N}{\Delta t} \propto N$$

$$\text{or, } \Delta N/\Delta t = \lambda N,$$

where λ is called the radioactive decay constant or disintegration constant.
The change in the number of nuclei in the sample is dN = – ΔN in time Δt. Thus, the rate of change of N is (in the limit Δt → 0)

$$\frac{dN}{dt} = -\lambda N$$

$$\frac{dN}{N} = -\lambda dt$$

Integrating both sides we get-

$$\int_{N_0}^{N} \frac{dN}{N} = -\lambda \int_{t_0}^{t} dt$$

$$\ln N - \ln N_0 = -\lambda (t - t_0)$$

Where N_0 is the number of radioactive nuclei in the sample at some arbitrary time t_0 and N is the number of nuclei at any subsequent time t. For $t_0 = 0$,

$$\ln \frac{N}{N_0} = -\lambda t$$

which gives

$$\boxed{N(t) = N_0 e^{-\lambda t}}$$

The total decay rate R of a sample is the number of nuclei disintegrating per unit time. Suppose in a time interval dt, the decay count is ΔN. Then dN = -ΔN. The positive quantity R is defined as-

$$R = -\frac{dN}{dt}$$

Differentiating the expression for N(t), we get-

$$R = \lambda N_0 e^{-\lambda t}$$

$$\boxed{R = R_0 e^{-\lambda t}}$$

Also,

$$\boxed{R = \lambda N}$$

The decay rate of a sample is known as 'activity'. The SI unit for activity is becquerel. 1 becquerel = 1 disintegration per second. Another unit for activity is curie-

$$\boxed{\begin{aligned} 1 \text{ curie} = 1 \text{ Ci} &= 3.7 \times 10^{10} \text{ decays per second} \\ &= 3.7 \times 10^{10} \text{ Bq} \end{aligned}}$$

Apni Kaksha

Half-Life (PYQ 2020, 2019)

Half-life of a radionuclide (denoted by $T_{1/2}$) is the time it takes for a sample that has initially, say N_o radio nuclei to reduce to $N_o/2$. Putting $N = N_o/2$ and $t = T_{1/2}$ in the equation, we get-

$$T_{1/2} = \frac{\ln 2}{\lambda} = \frac{0.693}{\lambda}$$

Important PYQs

Ques: Two different radioactive substances have half-lives T_1 and T_2 and number of undecayed atoms at an instant, N_1 and N_2 respectively. Find the ratio of their activities at this instant. **(PYQ 2020) [2M]**

Ans: We know-

$$T_1 = \frac{\ln 2}{\lambda_1}; \lambda_1 = \frac{\ln 2}{T_1}$$

$$T_2 = \frac{\ln 2}{\lambda_2}; \lambda_2 = \frac{\ln 2}{T_2}$$

$$R_1 = \lambda_1 N_1 = \frac{\ln 2}{T_1} \cdot N_1$$

$$R_2 = \lambda_2 N_2 = \frac{\ln 2}{T_2} \cdot N_2$$

$$\frac{R_1}{R_2} = \frac{N_1 T_2}{N_2 T_1}$$

Ques: The rate of disintegration of a given radioactive nucleus is 10000 disintegrations/s and 5000 disintegrations/s after 20hr and 30hr respectively from the start. Calculate the half- life. **(PYQ 2019) [2M]**

Ans: $R = \lambda N$

$$R_1 = \lambda N_1 = 10{,}000 / s$$

$$R_2 = \lambda N_2 = 5000 / s$$

$$\frac{R_1}{R_2} = \frac{\lambda N_1}{\lambda N_2} = \frac{10{,}000}{5000}$$

$$\Rightarrow \frac{N_1}{N_2} = 2$$

Also,

$$\frac{N_1}{N_2} = \frac{N_0 e^{-\lambda t_1}}{N_0 e^{-\lambda t_2}} = 2$$

$$\Rightarrow e^{\lambda(t_2 - t_1)} = 2$$

$$\Rightarrow \lambda(30 - 20) = \log 2$$

$$\Rightarrow \lambda = \frac{\log 2}{10hr}$$

$$T_{1/2} = \frac{(\log 2)}{\lambda}$$

$$\Rightarrow T_{1/2} = 10hr$$

Average or Mean Life (τ)

Consider any arbitrary time t. The number of nuclei which disintegrate in time interval from t to t+Δt will be –

$$R(t)\Delta t = \lambda N_0 e^{-\lambda t} \Delta t$$

And each of them has lived for time t so the total life would be = $t\lambda N_0 e^{-\lambda t}$

But some nuclei live for a small time and others longer. So, to obtain the mean life, we have to find the average of this expression from time t=0 to t=∞. For this, we integrate over this limit and divide by the total number N_o-

$$\tau = \frac{\lambda N_0 \int_0^\infty t e^{-\lambda t} dt}{N_0} = \lambda \int_0^\infty t e^{-\lambda t} dt$$

Upon integrating, we get-

$$\tau = 1/\lambda$$

Apni Kaksha

Therefore,

$$T_{1/2} = \frac{\ln 2}{\lambda} = \tau \ln 2$$

Alpha Decay (PYQ 2020)

In α-decay, the mass number of the product nucleus (daughter nucleus) is four less than that of the decaying nucleus (parent nucleus), while the atomic number decreases by two.

$$^{A}_{Z}X \rightarrow ^{A-4}_{Z-2}Y + ^{4}_{2}He$$

From Einstein's mass-energy equivalence relation and energy conservation, it is clear that this spontaneous decay is possible only when the total mass of the decay products is less than the mass of the initial nucleus. This difference in mass appears as kinetic energy of the products.

Disintegration energy OR Q-value

The disintegration energy or the Q-value of a nuclear reaction is the difference between the initial mass energy and the total mass energy of the decay products. For α-decay-

$$Q = (m_X - m_Y - m_{He})\, c^2$$

Q>0 for exothermic process such as α-decay

Note: Q is also the net kinetic energy gained in the process or, if the initial nucleus X is at rest, the kinetic energy of the products.

Important PYQs

Ques: The nucleus $^{235}_{92}Y$, initially at rest, decays into $^{231}_{90}X$ by emitting an α-particle.

$$^{235}_{92}Y \longrightarrow ^{231}_{90}X + ^{4}_{2}He + \text{energy.}$$

The binding energy per nucleon of the parent nucleus, the daughter nucleus and α-particle are 7.8 MeV, 7.835 MeV, and 7.07 MeV respectively. Assuming the daughter nucleus to be formed in the unexcited state and neglecting its energy in the share of the reaction, find the speed of the emitted α-particle. (Mass of α-particle = 6.68×10^{-27} Kg) **(PYQ 2020) [3M]**

Ans: Total binding energy of Y= $7.8 \times 235 = 1833 MeV$

Total binding energy of X = $7 \cdot 835 \times 231 = 1809 \cdot 885 MeV$

Binding energy of Alpha particle = $7.07 \times 4 = 28.28 MeV$

Energy released =

$B \cdot E_f - B_i F_i$

$(1809 \cdot 885 + 28 \cdot 28) - 1833 = 5.165 MeV$

This energy appears as kinetic energy of the alpha particle. So-

$$\frac{1}{2}mv^2 = 5.165 \times 10^6 \times 1 \cdot 6 \times 10^{-19}$$

$$v = \sqrt{\frac{2 \times 5 \cdot 165 \times 1 \cdot 6 \times 10^{-13}}{4 \times 1.67 \times 10^{-27}}}$$

$$v = 1.57 \times 10^7 \quad m/s$$

Apni Kaksha

Beta Decay (PYQ 2020, 2018, 2014)

In beta decay, a nucleus spontaneously emits an electron (β^- decay) or a positron (β^+ decay).

β^- Decay

In β^- Decay, the mass number A remains unchanged but the atomic number of the nucleus goes up by 1. The emission of electron in β^-decay is accompanied by the emission of an antineutrino (ν). The basic underlying process of this is the conversion of neutron to proton

$$n \rightarrow p + e^- + \bar{\nu}$$

β^+ Decay

In β^+ Decay, the mass number A remains unchanged but the atomic number Z of the nucleus goes down by 1. The emission of electron in β^+ Decay is accompanied by the emission of a neutrino (ν). The basic underlying nuclear process of this the conversion of proton to neutron

$$p \rightarrow n + e^+ + \nu$$

Note: A free neutron can decay into a proton but the conversion of proton to neutron only takes place inside the nucleus since proton has smaller mass than neutron.

Important PYQs

Ques: In beta decay the parent and daughter nuclei have the same number of _____ **(PYQ 2020) [1M]**

Ans: Nucleons

Ques: In the nuclear reaction, calculate the values of a and b **(PYQ 2018) [1M]**

$$n + {}^{235}_{92}U \longrightarrow {}^{a}_{54}Xe + {}^{94}_{b}Sr + 2n$$

Ans: In a nuclear reaction, mass number = Z + N remains conserved, so-

Balancing No. Of protons-

$92 = 54 + b$

$b = 38$

Balancing mass number -

$1 + 235 = a + 94 + 2$

$a = 140$

Gamma Decay

Like an atom, a nucleus also has discrete energy levels - the ground state and excited states. The scale of energy is, however, very different. Atomic energy level spacings are of the order of eV, while the difference in nuclear energy levels is of the order of MeV. When a nucleus in an excited state spontaneously decays to its ground state (or to a lower energy state), a photon is emitted with energy equal to the difference in the two energy levels of the nucleus. This is the so-called gamma decay. The energy (MeV) corresponds to radiation of extremely short wavelength, shorter than the hard X-ray region. Gamma ray is emitted when a α or β decay results in a daughter nucleus in an excited

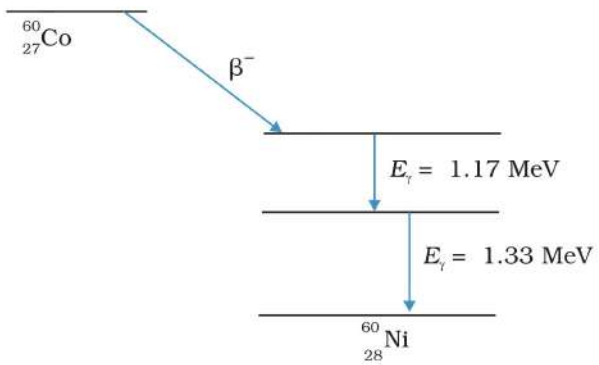

Apni Kaksha

state. This then returns to the ground state by a single photon transition or successive transitions involving more than one photon.

Nuclear Energy

The greater the binding energy, the less is the total mass of a bound system, such as a nucleus. Consequently, if nuclei with less total binding energy transform to nuclei with greater binding energy, there will be a net energy release. This is what happens when a heavy nucleus decays into two or more intermediate mass fragments (fission) or when light nuclei fuse into a heavier nucleus (fusion.)

Nuclear Fission (PYQ 2015)

When a heavier nucleus of comparatively lesser binding energy splits to give lighter nuclei of comparatively higher binding energy, there is a net release of energy. The disintegration energy in fission events first appears as the kinetic energy of the fragments and neutrons. Eventually it is transferred to the surrounding matter appearing as heat. The source of energy in nuclear reactors, which produce electricity, is nuclear fission.

Note: The enormous energy released in an atom bomb comes from uncontrolled nuclear fission.

Nuclear reactor (PYQ 2017, 2015)

- There is a release of extra neutron (s) in the fission process. Averagely, $2_{1/2}$ neutrons are released per fission of uranium nucleus. It is a fraction since in some fission events 2 neutrons are produced, in some 3, etc. The extra neutrons in turn can initiate fission processes, producing still more neutrons, and so on. This leads to the possibility of a chain reaction
- If the chain reaction is controlled suitably, we can get a steady energy output. This is what happens in a nuclear reactor.
- slow neutrons (thermal neutrons) are much more likely to cause fission in $^{235}{}_{92}U$ than fast neutrons. Also, fast neutrons liberated in fission would escape instead of causing another fission reaction.
- The ratio, K, of number of fissions produced by a given generation of neutrons to the number of fissions of the preceding generation may be greater than one. This ratio is called the multiplication factor; it is the measure of the growth rate of the neutrons in the reactor. For K = 1, the operation of the reactor is said to be critical, which is what we wish it to be for steady power operation. If K becomes greater than one, the reaction rate and the reactor power increases exponentially.

Construction and Working

- The core of the reactor is the site of nuclear fission. It contains the fuel elements in suitably fabricated form. The fuel Maybe say enriched uranium
- The core contains a moderator to slow down the neutrons. In reactors, light nuclei called moderators are provided along with the fissionable nuclei for slowing down fast neutrons. The moderators commonly used are water, heavy water (D_2O) and graphite.
- The core is surrounded by a reflector to reduce leakage.
- The energy (heat) released in fission is continuously removed by a suitable coolant.
- A containment vessel prevents the escape of radioactive fission products. The whole assembly is shielded to check harmful radiation from coming out.
- The reaction rate is controlled through control-rods made out of neutron-absorbing material such as cadmium.
- In addition to control rods, reactors are provided with safety rods which, when required, can be inserted into the reactor and K can be reduced rapidly to less than unity.
- The coolant transfers heat to a working fluid which in turn may produce stream. The steam drives turbines and generates electricity.

Apni Kaksha

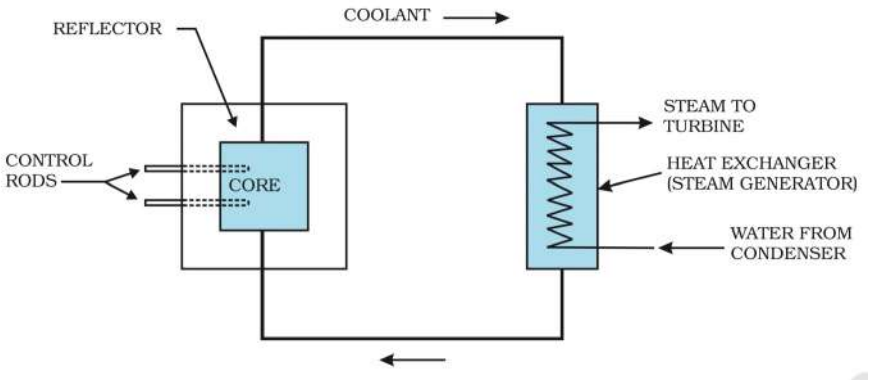

Note: Like any power reactor, nuclear reactors generate considerable waste products. But nuclear wastes need special care for treatment since they are radioactive and hazardous**.**

Nuclear Fusion and Energy Generation in Stars (PYQ 2016, 2015, 2013)

- When two light nuclei fuse to form a larger nucleus, energy is released, since the larger nucleus is more tightly bound.
- When fusion is achieved by raising the temperature of the system so that particles have enough kinetic energy to overcome the coulomb repulsive behavior, it is called thermonuclear fusion.
- Thermonuclear fusion is the source of energy output in the interior of stars.
- The fusion reaction in the sun is a multi-step process in which the hydrogen is burned into helium. Thus, the fuel in the sun is the hydrogen in its core. The process by which this happens is called the proton-proton (p, p) cycle.

Controlled Thermonuclear Fusion

- The natural thermonuclear fusion process in a star is replicated in a thermonuclear fusion device.
- In controlled fusion reactors, the aim is to generate steady power by heating the nuclear fuel to a temperature in the range of 10^8 K.
- At these temperatures, the fuel is a mixture of positive ions and electrons (plasma). The challenge is to confine this plasma, since no container can stand such a high temperature.

Important PYQs

Ques: Calculate the energy in the fusion reaction **(PYQ 2016, 2015, 2013) [2M]**

$${}^{2}_{1}H + {}^{2}_{1}H \longrightarrow {}^{3}_{2}He + n$$, where BE of ${}^{2}_{1}H$ = 2.23 MeV and of ${}^{3}_{2}He$ = 7.73 MeV.

Ans: Initial binding energy = $2 \cdot 23 \times 2 = 4.46 MeV$

Final binding energy = 7.73 MeV

Energy of reaction =

$B \cdot E_f - B \cdot E_i$

$7 \cdot 73 - 4.46$

$= 3.27 MeV$

Apni Kaksha

Important Definitions and Derivations

Ques: Define the term Half-Life **(PYQ 2020) [1M]**

Ques: Draw a plot showing variation of potential energy of a pair of nucleons as a function of their separation. Mark the regions where the nuclear force is i) attractive ii) repulsive **(PYQ 2018) [2M]**

Ques: From the relation $R = R_{\circ}A^{1/3}$ where $R_{\circ}$ is constant and A is the mass number of the nucleus, show that nuclear matter density is independent of A **(PYQ 2015, 2013) [1M]**

Ques: Distinguish between nuclear fission and fusion. Show how in both these processes energy is released **(PYQ 2015) [1M]**

Ques: Deduce the expression $N = N_{\circ}e^{-\lambda t}$, for the law of radioactive decay **(PYQ 2014)**

Ques: Express the basic nuclear process underlying β^{+} decay **(PYQ 2014) [1M]**

Ques: Write any two characteristics of nuclear force **(PYQ 2011) [1M]**

Apni Kaksha

Apni Kaksha